NOTES:

1. SECURE NAME PLATE TO STOCK USING ADHESIVE, MIL-A-46050.
2. MIL-W-13855 APPLIES.

REVISIONS					
MF	ZONE	LTR	DESCRIPTION	DATE	APPRO

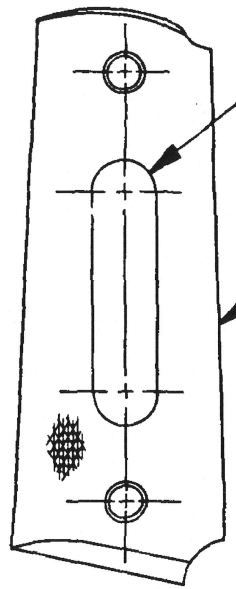

SEE PL-12006326

PART NO. 12006326

MECHANICAL PROPERTIES			
YS MIN			
YS MAX			
EL 2			
RA			
BH		F12006306	PISTOL, M15
RH		NEXT ASSY	USED ON
		APPLICATION	

UNLESS OTHERWISE SPECIFIED DIMENSIONS ARE IN INCHES
TOLERANCES:
ANGLES ± —
3 PLACE DECIMALS ± —
2 PLACE DECIMALS ± —

MATERIAL —

FINAL PROTECTIVE FINISH —

CONTRACT NO:
DATE 23 MAY 73
PREP R.L. Bessig
CHK
ENGR E. Winter
SUBMITTED A. A. Cole
APPROVED R. S. Henry

DEPT OF THE ARMY
U.S. ARMY WEAPONS COMMAND
ROCK ISLAND, ILLINOIS, 61201

STOCK ASSEMBLY, LEFT HAND

SIZE	CODE IDENT NO.	DRAWING NO.
B	19204	12006326

SCALE 1/1 SHEET 1 OF 1

AMSWE Form 403B 13 Nov 70

EDITION OF 29 JUL 69 MAY BE USED.

NOTES:

1. MAKE FROM PART NO. 7790350. ALTER AS SHOWN.
2. MIL-W-13855 APPLIES.

REVISIONS					
MF	ZONE	LTR	DESCRIPTION	DATE	APPRO

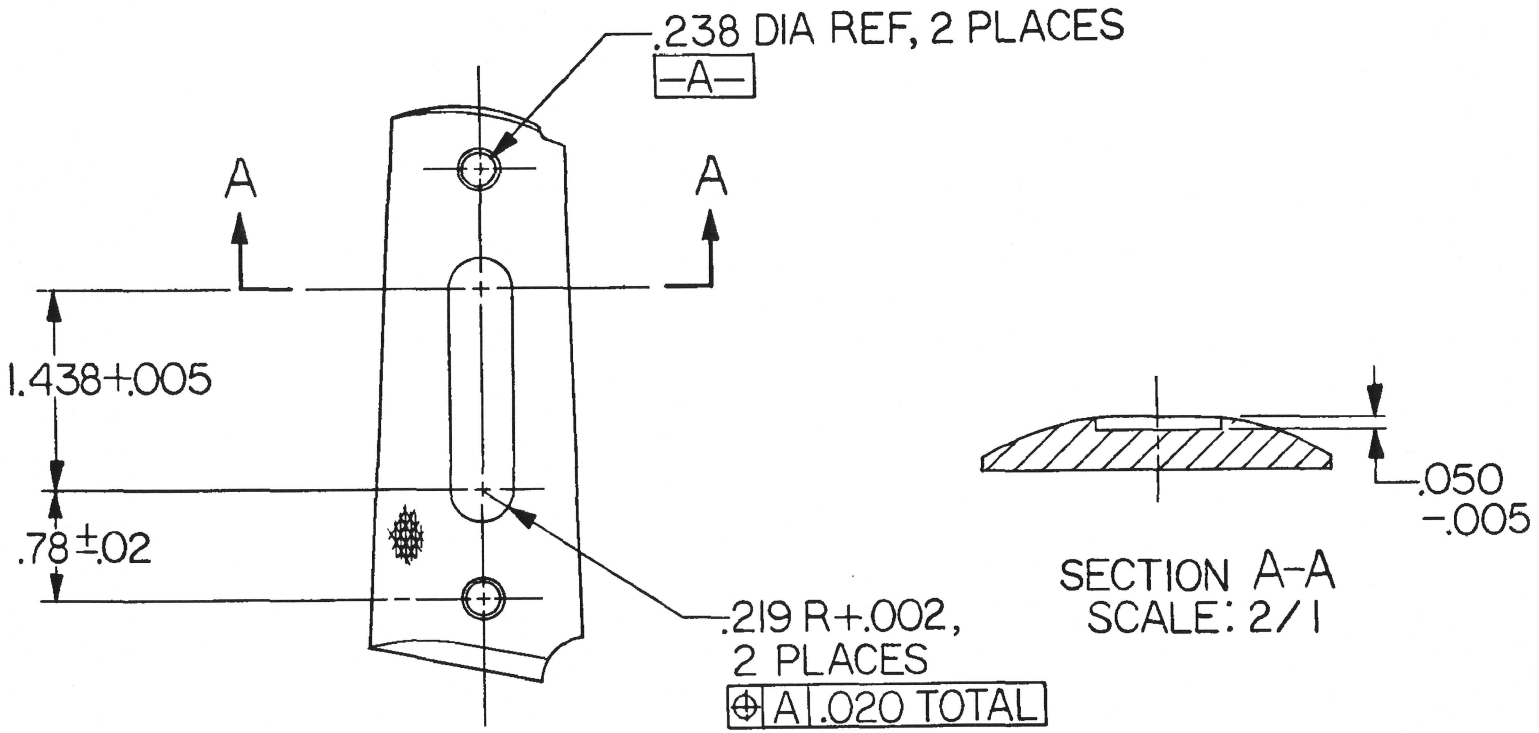

ALTERED ITEM DRAWING

PART NO. 12006327

MECHANICAL PROPERTIES	
YS MIN	
YS MAX	
EL 2	
RA	
BH	
RH	

B12006326	PISTOL, M15
NEXT ASSY	USED ON
APPLICATION	

UNLESS OTHERWISE SPECIFIED DIMENSIONS ARE IN INCHES
TOLERANCES:
ANGLES ± —
3 PLACE DECIMALS ± —
2 PLACE DECIMALS ± —

MATERIAL

FINAL PROTECTIVE FINISH

CONTRACT NO:
DATE 23 MAY 73
PREP
CHK
ENGR
SUBMITTED
APPROVED

DEPT OF THE ARMY
U.S. ARMY WEAPONS COMMAND
ROCK ISLAND, ILLINOIS, 61201

STOCK, LEFT HAND

SIZE	CODE IDENT NO.	DRAWING NO.
B	19204	12006327

SCALE 1/1 SHEET | OF |

AMSWE Form 402B, 12 Nov 70 EDITION OF 29 JUL 69 MAY BE USED

REVISIONS					
MF	ZONE	LTR	DESCRIPTION	DATE	APPRO

NOTES:

1. STAINLESS STEEL, CMPNS 302 OR 304, C.R., ANN., AND PICKLED, NO. 2B FINISH, MIL-S-5059.
2. MIL-W-13855 APPLIES.

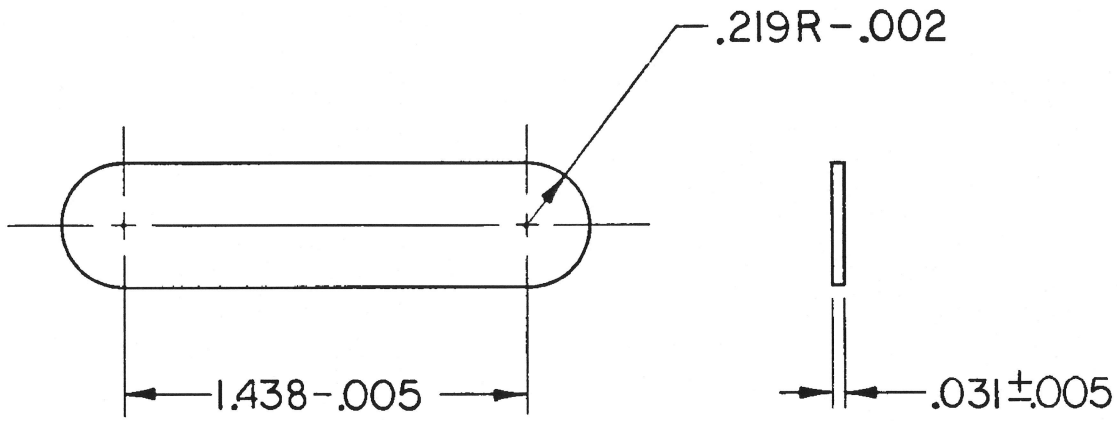

PART NO. 12006328

MECHANICAL PROPERTIES	
YS MIN	
YS MAX	
EL 2	
RA	
BH	
RH	

B 12006326	PISTOL, M15
NEXT ASSY	USED ON
APPLICATION	

UNLESS OTHERWISE SPECIFIED DIMENSIONS ARE IN INCHES
TOLERANCES:
ANGLES ± ——
3 PLACE DECIMALS ± ——
2 PLACE DECIMALS ± ——

MATERIAL
SEE NOTE 1

FINAL PROTECTIVE FINISH
——

CONTRACT NO:
DATE 23 MAY 73

PREP	Ketner	R.W. Belcamp
CHK		
ENGR	E.G. Winter	

SUBMITTED
L.A. Cole

APPROVED
L.S. Henry

DEPT OF THE ARMY
U.S. ARMY WEAPONS COMMAND
ROCK ISLAND, ILLINOIS, 61201

PLATE, NAME

SIZE	CODE IDENT NO.	DRAWING NO.
B	19204	12006328

SCALE 2/1 | SHEET | OF |

AMSWE Form 403B, 13 Nov 70 — EDITION OF 29 JUL 69 MAY BE USED

NOTES:

1. MIL-W-13855 APPLIES.

REVISIONS					
MF	ZONE	LTR	DESCRIPTION	DATE	APPRO

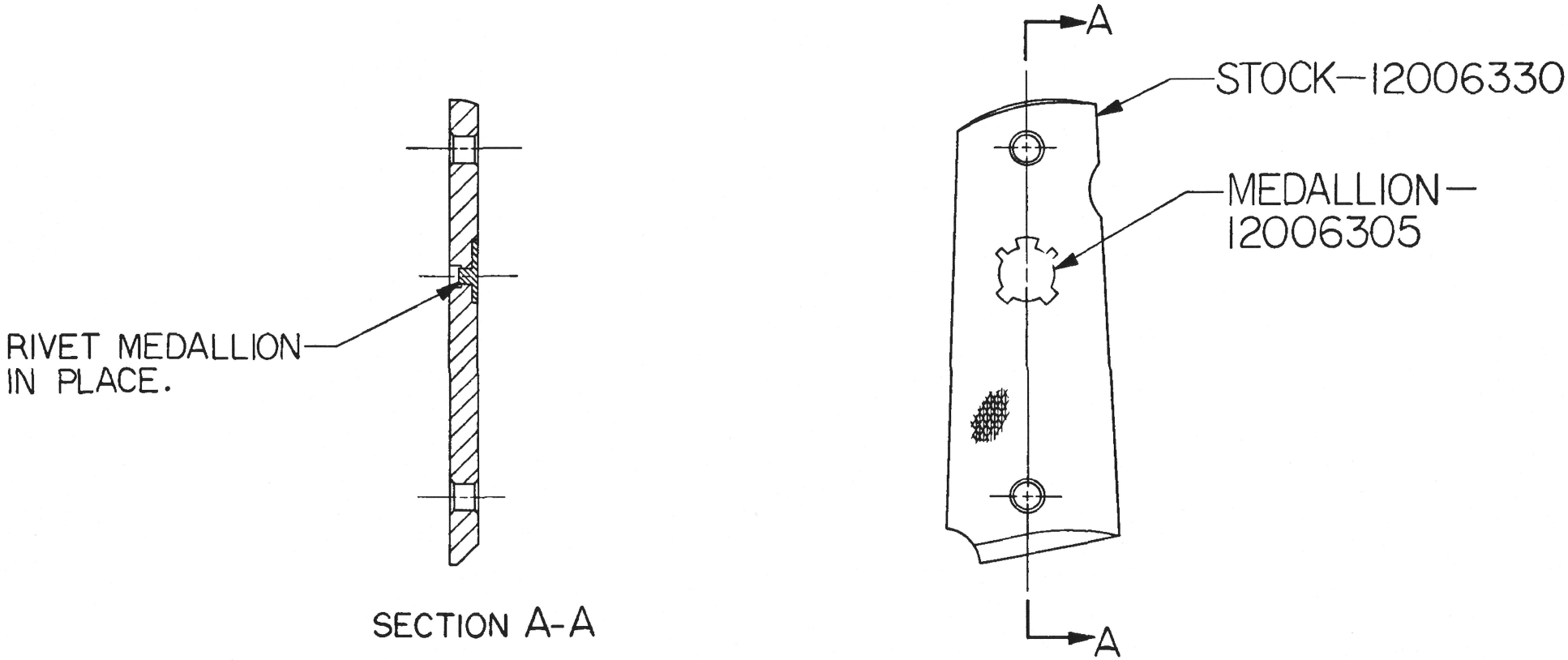

SEE PL-12006329

PART NO. 12006329

MECHANICAL PROPERTIES	
YS MIN	
YS MAX	
EL 2	
RA	
BH	
RH	

NEXT ASSY	USED ON
F12006306	PISTOL, M15

APPLICATION

UNLESS OTHERWISE SPECIFIED DIMENSIONS ARE IN INCHES
TOLERANCES:
ANGLES ± —
3 PLACE DECIMALS ± —
2 PLACE DECIMALS ± —

MATERIAL

FINAL PROTECTIVE FINISH

CONTRACT NO:
DATE 23 MAY 73
PREP R.L. Passig
CHK R.W. [illegible]
ENGR E. Winter
SUBMITTED A. A. Cole
APPROVED R. S. Henry

DEPT OF THE ARMY
U.S. ARMY WEAPONS COMMAND
ROCK ISLAND, ILLINOIS, 61201

STOCK ASSEMBLY, RIGHT HAND

SIZE	CODE IDENT NO.	DRAWING NO.
B	19204	12006329

SCALE 1/1 SHEET 1 OF 1

AMSWE Form 402B 12 Nov 70

EDITION OF 29 JUL 69 MAY BE USED

NOTE:

1. MAKE FROM PART NO. 7790349, ALTER AS SHOWN.
2. FINISH 29.7 OF MIL-STD-171. LIGHT COLORED AREAS SHALL BE HAND STAINED AND THE FINISHED COMPONENT SHALL BE AS DARK OR DARKER THAN THE COLOR SPECIMEN PREPARED IN ACCORDANCE WITH MIL-F-13088.
3. MIL-W-13855 APPLIES.

REVISIONS					
MF	ZONE	LTR	DESCRIPTION	DATE	APPRO

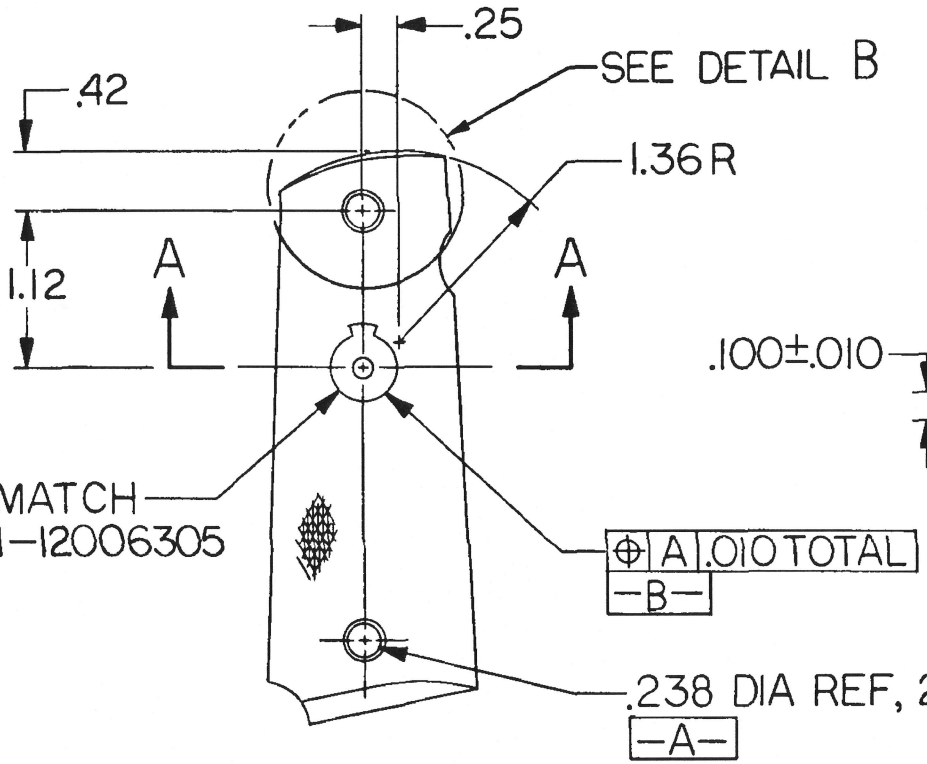

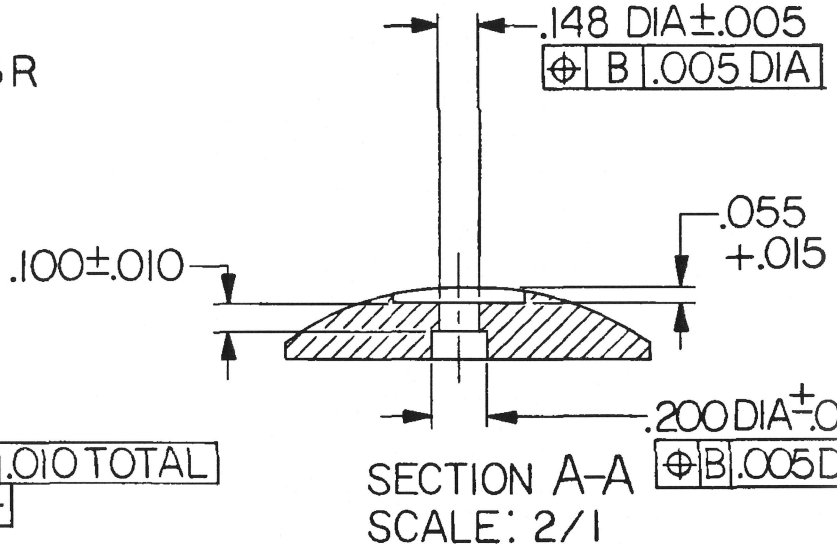

SECTION A-A
SCALE: 2/1

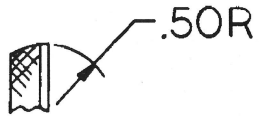

DETAIL B
ROTATE 90° CCW

ALTERED ITEM DRAWING
PART NO. 12006330

MECHANICAL PROPERTIES				UNLESS OTHERWISE SPECIFIED DIMENSIONS ARE IN INCHES TOLERANCES: ANGLES ± — 3 PLACE DECIMALS ± — 2 PLACE DECIMALS ±.02	CONTRACT NO: DATE 23 MAY 73	DEPT OF THE ARMY U.S. ARMY WEAPONS COMMAND ROCK ISLAND, ILLINOIS, 61201
YS MIN					PREP R.L. Bray	STOCK, RIGHT HAND
YS MAX				MATERIAL	CHK R.W. DeArman	
EL 2					ENGR E. Winter	
RA		B12006329	PISTOL, M15		SUBMITTED A. A. Cole	SIZE B / CODE IDENT NO. 19204 / DRAWING NO. 12006330
BH		NEXT ASSY	USED ON	FINAL PROTECTIVE FINISH SEE NOTE 2	APPROVED R. S. Henry	
RH		APPLICATION				SCALE 1/1 / SHEET 1 OF 1

AMSWE Form 403B 13 Nov 70 EDITION OF 29 JUL 69 MAY BE USED

NOTES:

1. PIN-12006332 SHALL NOT PROTRUDE BEYOND THE SURFACE OF END-12006333. GRIND AS REQUIRED.
2. MIL-W-13855 APPLIES.

REVISIONS					
MF	ZONE	LTR	DESCRIPTION	DATE	APPRO

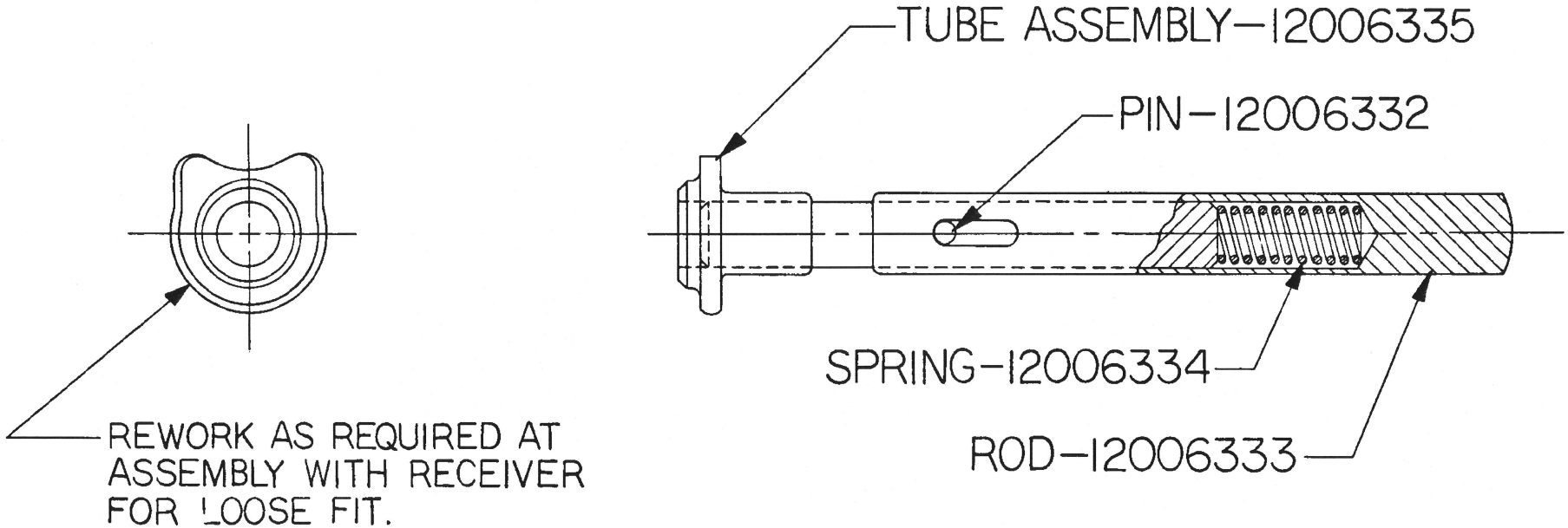

SEE PL-12006331

PART NO. 12006331

MECHANICAL PROPERTIES	
YS MIN	
YS MAX	
EL 2	
RA	
B	
RH	

NEXT ASSY	USED ON
F12006306	PISTOL, M15

APPLICATION

UNLESS OTHERWISE SPECIFIED DIMENSIONS ARE IN INCHES
TOLERANCES:
ANGLES ± —
3 PLACE DECIMALS ± —
2 PLACE DECIMALS ± —

MATERIAL

FINAL PROTECTIVE FINISH

CONTRACT NO:
DATE 23 MAY 73
PREP R.L. Passig R.W. DeLorme
CHK
ENGR E.A. Hunter
SUBMITTED A. A. Cole
APPROVED R. S. Henry

DEPT OF THE ARMY
U.S. ARMY WEAPONS COMMAND
ROCK ISLAND, ILLINOIS, 61201

GUIDE ASSEMBLY, RECOIL SPRING

SIZE	CODE IDENT NO.	DRAWING NO.
B	19204	12006331

SCALE 2/1 SHEET 1 OF 1

AMSWE Form 403B 13 Nov 70

EDITION OF 29 JUL 69 MAY BE USED

NOTES:

1. STEEL, CMPSN 1020 THRU 1030, SPEC QQ-S-634.
2. ALL EDGES SHALL BE BROKEN .005+.010.
3. FINISH 3.3.1 OF MIL-STD-171.
4. MIL-W-13855 APPLIES.

REVISIONS					
MF	ZONE	LTR	DESCRIPTION	DATE	APPROVE

PART NO. 12006332

MECHANICAL PROPERTIES	
YP	
TS	
EL 2	
RA	
BH	
RH	

NEXT ASSY.	USED ON
B12006331	PISTOL, M15

APPLICATION

UNLESS OTHERWISE SPECIFIED DIMENSIONS ARE IN INCHES

TOLERANCES ON DECIMALS .XX ± — .XXX ± —

ANGLES ± —

MATERIAL SEE NOTE 1

HEAT TREATMENT ———

FINAL PROTECTIVE FINISH SEE NOTE 3

ORIGINAL DATE OF DRAWING 23 MAY 73

DRAFTSMAN R.L. Passig | CHECKER R.W. DeArmond

TRACER | CHECKER

ENGINEER E.A. Winter | ENGINEER

SUBMITTED A. A. Cole

APPROVED R. S. Henry

DEPT OF THE ARMY
ROCK ISLAND ARSENAL, ROCK ISLAND, ILL. 6120

PIN

DWG SIZE	CODE IDENT NO.	
B	19204	12006332

SCALE 10/1 | UNIT WT | SHEET 1 OF 1

SWERI FORM 40B, 1 MAR 67

NOTES:

1. STEEL, CMPSN 1018 THRU 1030, SPEC QQ-S-634.
2. FINISH 125 ALL OVER.
3. FINISH 3.3.1 OF MIL-STD-171.
4. MIL-W-13855 APPLIES.

REVISIONS					
MF	ZONE	LTR	DESCRIPTION	DATE	APPROVE

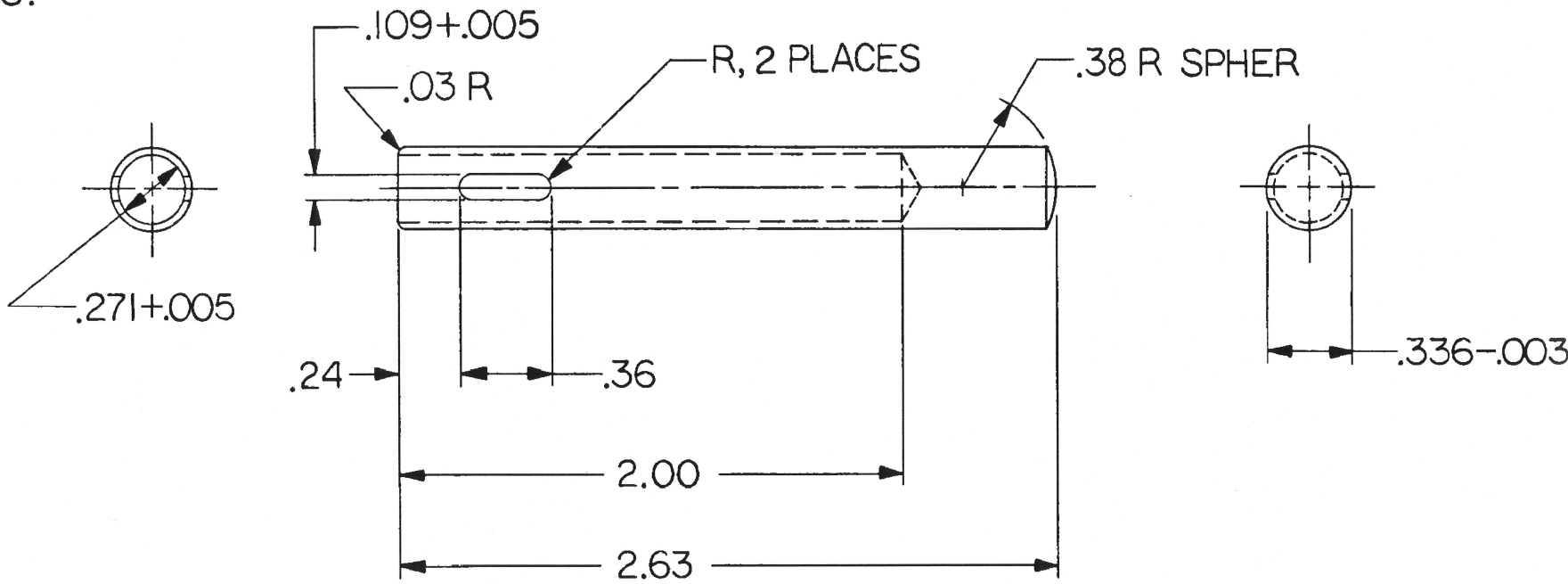

PART NO. 12006333

MECHANICAL PROPERTIES				UNLESS OTHERWISE SPECIFIED DIMENSIONS ARE IN INCHES	ORIGINAL DATE OF DRAWING 23 MAY 73	DEPT OF THE ARMY ROCK ISLAND ARSENAL, ROCK ISLAND, ILL. 6120
YP				TOLERANCES ON DECIMALS .XX ±.01 ANGLES ± — .XXX ± —	DRAFTSMAN R.L. Fossig / CHECKER R.W. McVernon	
TS					TRACER / CHECKER	ROD
EL 2				MATERIAL SEE NOTE 1	ENGINEER G.A. Winter / ENGINEER	
RA				HEAT TREATMENT —	SUBMITTED A.A. Cole	DWG SIZE B / CODE IDENT NO. 19204 / 12006333
BH		B12006331	PISTOL, M15			
		NEXT ASSY.	USED ON	FINAL PROTECTIVE FINISH SEE NOTE 3	APPROVED R.J. Henry	SCALE 2/1 / UNIT WT / SHEET 1 OF 1
RH		APPLICATION				

SWERI FORM 40B. 1 MAR 67

REVISIONS					
MF	ZONE	LTR	DESCRIPTION	DATE	APPROVE

NOTES:

1. WIRE, STEEL, MUSIC, SPEC QQ-W-470.

WIRE DIAMETER _____ .028
COIL DIAMETER ( ) _____ .23
FREE LENGTH _____ .88 REF
TOTAL COILS _____ 11.7 REF
DIRECTION OF HELIX _____ OPTIONAL
LOAD AT COMPRESSED LENGTH OF .62 _____ 3.0 LB ±.5
LOAD AT COMPRESSED LENGTH OF .37 _____ 5.8 LB ±.5
SPRING RATE _____ 11.5 LB / IN REF
SOLID LENGTH _____ .33
TYPE OF ENDS _____ CLOSED AND GROUND FLAT
MANUFACTURE IN ACCORDANCE WITH TYPE I, GRADE B, MIL-S-13572

(USED WITH

PART NO. 12006334

MECHANICAL PROPERTIES			
YP			
TS			
EL 2			
RA			
BH		B12006331	PISTOL, M15
		NEXT ASSY.	USED ON
RH		APPLICATION	

UNLESS OTHERWISE SPECIFIED DIMENSIONS ARE IN INCHES
TOLERANCES ON DECIMALS .XX ± .01
ANGLES ± .XXX ± .005
MATERIAL SEE NOTE 1
HEAT TREATMENT
FINAL PROTECTIVE FINISH

ORIGINAL DATE OF DRAWING 23 MAY 73
DRAFTSMAN R.L. Prong
CHECKER R.W. Armond
TRACER
CHECKER
ENGINEER E. Winter
ENGINEER
SUBMITTED A. A. Cole
APPROVED R.S. Henry

DEPT OF THE ARMY
ROCK ISLAND ARSENAL, ROCK ISLAND, ILL. 6120

SPRING, HELICAL, COMPRESSION

DWG SIZE	CODE IDENT NO.	
B	19204	12006334
SCALE —	UNIT WT	SHEET 1 OF 1

SWERI FORM 40B 1 MAR 67